*Journal of Chromatography*, 202 (1980) 157–177
Elsevier Scientific Publishing Company, Amsterdam — Printed in The Netherlands

CHROM. 13,144

# CONTINUOUS-FLOW, SUPPORT-FREE, ELECTROPHORETIC SEPARATION IN THIN LAYERS: TOWARDS LARGE-SCALE OPERATION

ALEXANDER C. ARCUS*, ALAN E. McKINNON, JOHN H. LIVESEY, WALTER S. METCALF, STEVEN VAUGHAN and ROGER B. KEEY

*Christchurch Hospital and University of Canterbury, Christchurch (New Zealand)*

(Received March 26th, 1980)

## SUMMARY

The operation of continuous-flow, support-free electrophoretic separators of the Philpot thin-layer configuration (*i.e.* thin in the direction of electrophoretic migration) is modelled with the simplifying assumptions of: (i) solution properties uniform (except for electrophoretic mobility) and not affected by temperature; (ii) zero thermal resistance of the separator walls; (iii) plug flow; and (iv) diffusion as the only zone-broadening influence. It is shown for both adiabatically operated and cooled separators that the four main operational variables, *viz.* maximum temperature, resolving power, processing rate and separator size, are in each case inseparably united in a single relationship. These relationships indicate on the one hand that certain separations would be impossible in apparatus of this sort because of the high temperatures that would necessarily be involved, while on the other that the processing capacity with permitted separations would be increased indefinitely by narrowing of the separator in the direction of electrophoretic migration. The significance of these findings for real, large-scale electrophoretic separators is discussed.

## INTRODUCTION

On a micro scale, zone electrophoresis in its many variants is an excellent and widely used technique for the separation of ionic materials in solution: it has proved especially useful for proteins, nucleic acids and other polymeric biologicals that are not readily separable without damage by the classical analytical methods. However, most attempts to scale-up this process for preparative use have been disappointing, largely because of the problems involved in the dissipation of the increased ohmic heat that is produced. Whereas most workers have approached this shortcoming by concentrating on efficiency of cooling, few have considered the alternative, *viz.* minimising heat production, in spite of the elegant exposition of the implications of this approach in a short paper by Philpot[1] as early as 1940.

Philpot considered the continuous, support-free configuration for zone electrophoresis represented in Fig. 1, a configuration which has been the basis for many

0021-9673/80/0000–0000/$02.25 © 1980 Elsevier Scientific Publishing Company

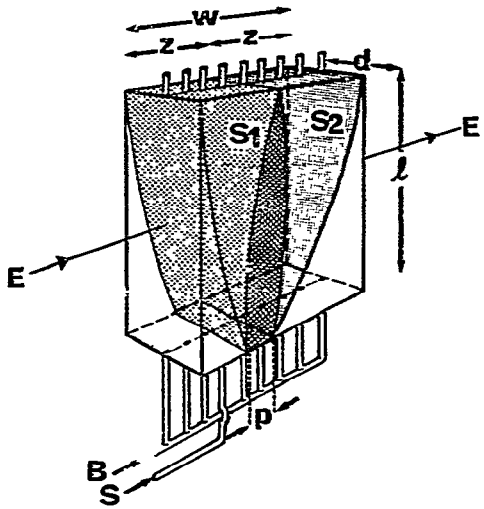


Fig. 1. Diagram of model separator; see text for explanation.

actual working models[1–11]. In this variant the sample solution for analysis, S, is pumped into the rectangular separator sandwiched between zones of electrolyte, B, which are pumped in on either side. Under the influence of the electric field, E, the sample components (two, $S_1$ and $S_2$, shown in the diagram) are deflected from the straight course through the separator to an extent dependent on their individual electrophoretic mobilities. Providing that these deflections are not equal, the component zones diverge, emerging more or less separately from the top of the apparatus.

To understand how ohmic heating might be minimised in this separator, it is instructive to consider what would happen if it were narrowed in the particular sense of $w$ being reduced. To simplify the following argument it is assumed that throughout the separator (i) the intrinsic solution properties (thermal and electrical conductivity, specific heat, etc.) are uniform and (ii) the liquid flow is uniform in magnitude and direction (plug flow). With the proviso of linearity of zone-broadening discussed below, it is evident that if $w$ were reduced while all other factors were kept constant (*i.e.* separator length and depth, potential gradient of the electric field, pumping rates of B and S, and the number of outlets), then the $S_1$ and $S_2$ zones would be narrowed proportionately and the resolution of these components not altered. It is to be noticed particularly that the sample throughput, proportional to the pumping rate of S, would not be reduced. However, the ohmic heat production per unit time (or, what amounts to the same thing, per unit of sample throughput) would be reduced in proportion to the narrowing. Thus, as far as heat production goes, it would seem to be advantageous to work with very narrow separators.

Narrowing would have two other important advantages. Firstly, passage-time for the solutions through the separator would be proportionately less so that convective and possibly other disturbances to uniform flow would have less time to develop. And secondly, if the separator were narrow enough, cooling could be applied to its right- and left-hand sides rather than, as is more usually done, to the front and back. In this way the depth of the separator, $d$, would be freed from the

need for it to be small for the sake of cooling and this dimension could be increased indefinitely with a proportionate increase in processing capacity, an increase which could, without undue enlargement of the apparatus, be of the order of hundreds of times relative to the capacity of existing apparatus with the conventional (cooled-front-and-back, Hannig-type[7]) configuration. Still further narrowing of such (cooled-at-the-sides) apparatus would, according to the argument developed above, lead to even lower rates of heat production as well as to an increased efficiency of cooling, tendencies that would seem to provide an infinite possibility for reducing the problem of ohmic heat production and therefore for scaling up.

However, implicit in the above argument is the assumption that the widths of the $S_1$ and $S_2$ zones at the output end of the separator would be reduced in proportion to the narrowing. One component of zone-broadening that would not conform to this requirement is diffusion. The width of a narrow diffusing zone increases approximately with the square-root of time and is almost independent of the initial width of the zone. Therefore, halving, for example, the width of a narrow separator would halve the passage time but reduce the width of the sample zone at the output end by a factor of only *ca.* $1/\sqrt{2} = 0.707$, so that narrowing would lead to this zone occupying a greater proportion of the width of the separator. Thus, while narrowing at constant throughput and voltage gradient would lead to less heat production, in the face of diffusion it would also eventually lead to an unacceptable loss of resolution, and because diffusion is irreducible in principle this effect would constitute a fundamental limitation in separator design.

Using essentially this approach, Philpot[1] considered whether by narrowing the model separator shown in Fig. 1 it might be possible to reduce ohmic heat production to such an extent that all of the heat could be taken up by the flowing solutions themselves to result in a harmless temperature rise, obviating altogether the need for cooling. In formulating rate of heat production in a separator operating to produce, in the face of diffusion, a 95% separation of the two hypothetical components, he derived the expression

$$\Delta T = 7.38kD/\delta m^2$$

relating $\Delta T$, the increase in temperature of the solutions that occurs as they traverse the (adiabatically operated) separator, to $k$, the specific electrical conductance of the solutions (taken to be the same for B and S), $D$, the diffusion constant of the two sample components (taken to be the same for both), and $\delta m$, the difference between the electrophoretic mobilities of the two sample components. Philpot's conclusion was that a given degree of separation of the sample components would involve a certain expenditure of electrical energy per unit throughput of sample (proportional to adiabatic temperature rise) which would be determined entirely by solution parameters of the system and independent of the dimensions of the apparatus. Or, in other words, that there would be a one-to-one relationship, independent of separator dimensions, between heat production and resolution. Philpot calculated that as a consequence of this certain separations would be impossible in adiabatic apparatus because of the extent of the heating that would necessarily be involved, but at the same time that many useful separations would not be precluded by this effect.

However, Philpot's published analysis was based on a conveniently simple but approximate expression for diffusion, which would apply strictly only to the

limiting situation in which the initial sample zone width and therefore the processing rate were both vanishingly small, his treatment of finite sample zones and finite processing rates, as well as of the effects of cooling, being rather cursory. Therefore the present study was undertaken to extend Philpot's analysis to cover explicitly the case of finite sample zones. It will be shown that, for both cooled-at-the-sides separators conforming to the above model, and for those operated adiabatically, the four critical factors maximum temperature, resolving power, processing rate and separator size are in each case inseparably united in a single relationship, which involves diffusion rate and other solution indices as parameters. These relationships indicate on the one hand that certain separations would be impossible in apparatus of this sort because of the high temperatures that would necessarily be involved, while on the other, that the processing capacity with permitted separations would be increased indefinitely by narrowing of the separator in the sense considered above.

## ANALYSIS

In the following it is taken that non-turbulent plug flow and uniform solution properties (except of course for the electrophoretic mobilities of the two sample components), unaffected by temperature, prevail within the separator.

Consider the separation of two sample components, $S_1$ and $S_2$, in the apparatus outlined above (Fig. 1). In general, during passage through the separator the two sample components will, owing to various influences, each spread out to occupy a broader zone at the outlet end. For the present purpose it is convenient to consider these broadening tendencies to be the same for each sample and therefore the width of each of the zones at the outlet end is put equal to $z$. Since the width of the separator, $w$, has only to be large enough for the two components to emerge side by side, it is convenient to put

$$w = 2z \tag{1}$$

The operating conditions of the separator must be consistent with the $S_1$ and $S_2$ zones just separating at the outlet end of the apparatus. The condition that this is so — *i.e.* that particles of the two components starting from the same point at the input end migrate apart a distance $z$ in the passage time $t$ — is:

$$E_g \delta m t = z \tag{2}$$

where $E_g$ is the electrical potential gradient and $\delta m$ is the difference between the electrophoretic mobility coefficients of $S_1$ and $S_2$. Substituting for $z$ from eqn. 1, one obtains the basic operational equation for the model

$$E_g \delta m t = w/2 \tag{3}$$

The processing rate, $U$, defined as the pumping rate of the sample solution, is:

$$U = pdl/t \tag{4}$$

where $p$ is the width of the sample zone at the inlet end of the separator (defined by the relative pumping rates of B and S) and $d$ and $l$ are the separator depth and length respectively.

Zone broadening could in practice have many causes as discussed below but in the present analysis only diffusional broadening will be considered. Such broadening is of special significance because it is unavoidable in principle, and because, as outlined above, it is especially marked in narrow separators. Dispersion of a zone of material under the combined influence of electrophoresis and diffusion acting along the same ($x$) axis is described by the differential equation

$$D(\partial^2 c/\partial x^2) - E_o m\,(\partial c/\partial x) - \partial c/\partial t = 0$$

where $c$ is the concentration and $D$ the diffusion constant of the material, and $t$ is time. Putting $x = x' + E_o mt$ leads to the equation

$$D\,(\partial^2 c/\partial x^2) - \partial c/\partial t = 0$$

which is Fick's equation for purely diffusional dispersion. This transformation shows that combining the electrophoretic and diffusional influences merely leads to translation of the diffusional dispersion along the $x$ axis at a rate equal to that of the electrophoretic migration. In other words the resultant dispersion is equal to the sum of the electrophoretic and diffusional dispersions calculated separately.

According to diffusion theory the distribution of material diffusing in one dimension away from an initial slab-shaped zone of width, $p$, and uniform concentration, $c_0$, is given by the equation:

$$c = \frac{c_0}{2}\left(\operatorname{erf}\frac{p/2 + x}{2\sqrt{Dt}} + \operatorname{erf}\frac{p/2 - x}{2\sqrt{Dt}}\right) \tag{5}$$

where $x$ is the distance from the middle of the slab along the diffusion axis, and erf is the error function defined by:

$$\operatorname{erf} u = (2/\sqrt{\pi})\int_0^u \exp(-v^2)\,\mathrm{d}v \tag{6}$$

Because zones of diffusing material are strictly speaking infinitely broad, it is convenient to define zone width as containing a given large proportion, say 0.95, of the original material. With $r$ equal to the proportion of the diffusing material to be found within a zone of width $z$ disposed symmetrically about the initial zone, and $c_0 p$ equal to the total quantity of diffusing material per unit depth of the slab,

$$rc_0 p = \int_{-z/2}^{z/2} c\,\mathrm{d}x$$

whence, from eqn. 5,

$$rc_0 p = \frac{c_0}{2}\left[\int_{-z/2}^{z/2} \operatorname{erf}\frac{p/2 + x}{2\sqrt{Dt}}\,\mathrm{d}x + \int_{-z/2}^{z/2} \operatorname{erf}\frac{p/2 - x}{2\sqrt{Dt}}\,\mathrm{d}x\right]$$

Cancelling $c_0$ and putting $-y = x$ in the second integration, one has

$$rp = \frac{1}{2}\left[\int_{-z/2}^{z/2} \operatorname{erf}\frac{p/2 + x}{2\sqrt{Dt}}\,\mathrm{d}x + \int_{-z/2}^{z/2} \operatorname{erf}\frac{p/2 + y}{2\sqrt{Dt}}\,\mathrm{d}y\right]$$

$$= \int_{-z/2}^{z/2} \operatorname{erf}\frac{p/2 + x}{2\sqrt{Dt}}\,\mathrm{d}x \tag{7}$$

Putting $(p/2 + x)/2\sqrt{Dt} = u$, $dx = 2\sqrt{Dt}\cdot du$, and when $x = \pm z/2$, $U = (p \pm z)/4\sqrt{Dt}$. Substituting in eqn. 7

$$rp = 2\sqrt{Dt}\int_{(p-z)/4\sqrt{Dt}}^{(p+z)/4\sqrt{Dt}} \operatorname{erf} u \, du \tag{8}$$

At the outlet end of the separator, $z = w/2$ (eqn. 1) and $t$ is the passage time. Substituting for $z$ in eqn. 8 and rearranging, one has

$$\int_{(p-w/2)/4\sqrt{Dt}}^{(p+w/2)/4\sqrt{Dt}} \operatorname{erf} u \, du = rp/2\sqrt{Dt} \tag{9}$$

$$\text{Putting } (p - w/2)/4\sqrt{Dt} = A \tag{10}$$

$$\text{and} \quad (p + w/2)/4\sqrt{Dt} = B \tag{11}$$

in eqn. 9 one has

$$\int_A^B \operatorname{erf} u \, du = rp/2\sqrt{Dt} = r(B + A),$$

and, using the identity

$$\int_A^B \operatorname{erf} u \, du = (1/\sqrt{\pi})\,[\exp(-B^2) - \exp(-A^2)] + B \operatorname{erf} B - A \operatorname{erf} A,$$

one has

$$(1/\sqrt{\pi})\,[\exp(-B^2) - \exp(-A^2)] + B \operatorname{erf} B - A \operatorname{erf} A = r(B + A) \tag{12}$$

Eqns. 10–12 relate the width, $w$, of the electrophoretic separator to the width of the initial sample zone, $p$, the passage time, $t$, and the diffusion constant, $D$, for a given degree of resolution, $r$. Elimination of $A$ and $B$, which are dimensionless auxiliary variables of no obvious physical significance, would result in a single equation relating, $p$, $w$ and $t$ in terms of the parameters $D$ and $r$. We have not been able to solve these equations analytically, but Fig. 2 shows graphs of $A$ *vs.* $B$ for values of $r$ of 0.90, 0.95 and 0.99 which were plotted with the help of a computer, while Fig. 3 represents graphically in two dimensions the normalised relationships between $w$, $p$, $t$ and $D$.

For the limiting situation in which the effect of diffusion is vanishingly small (*i.e.* $A$, $B$, $w/\sqrt{Dt}$ and $p/\sqrt{Dt}$ infinite), $w = 2rp$, whence $w = 1.80p$, $1.90p$ and $1.98p$ for the three values of $r$, respectively. These lines are shown dashed in Fig. 3. In the same situation, from eqns. 10 and 11, $B = 19A$, $39A$ and $199A$ respectively, as shown (dashed) in Fig. 2.

Fig. 2 shows that $A = -B$ when $A = -1.165$, $-1.389$ and $-1.825$, respectively. These points correspond to the situation where all of the sample is initially concentrated in an infinitesimally narrow zone ($p = 0$, the situation studied by Philpot). From physical considerations $A$ and $B$ must always be greater than these values respectively.

The special cases where $A = 0$ (Fig. 2) correspond to the physical situation where $w/2 = p$, *i.e.* where just 90%, 95% and 99% respectively of either sample remains within a zone of width $p$ at the outlet end of the separator.

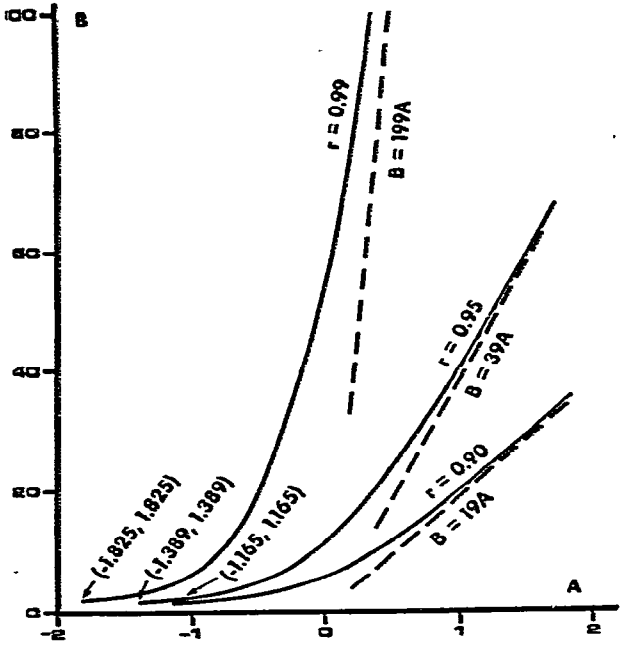


Fig. 2. Relationships between $A$ and $B$ (of the diffusion equation) and the resolution index ($r$).

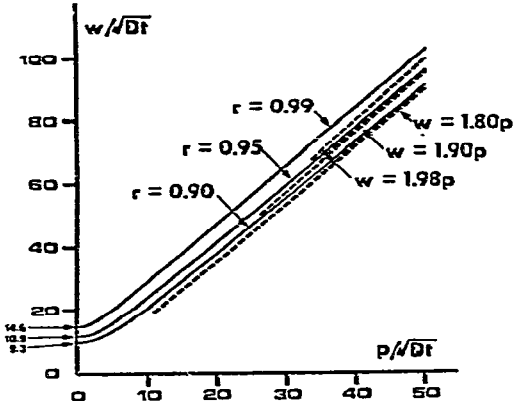


Fig. 3. Relationships between separator width ($w$), initial width of sample zone ($p$), passage time ($t$) and resolution index ($r$).

*Implications of adiabatic heating*

The temperature increase in the solutions flowing through the model separator operated adiabatically would be given by

$$\Delta T = kE_g^2 t/\varrho s$$

where $\varrho$ is the density of the solutions, $s$ the specific heat, and $k$ the specific electrical

conductance. Assuming for the sake of simplicity that the solutions enter at zero temperature (°C), then the maximum temperature would be

$$T_{a,max} = kE_g^2 t/\varrho s$$

Substituting for $E_g$ from eqn. 3 one has

$$T_{a,max} = kw^2/4\varrho s\delta m^2 t \tag{13}$$

and for $w^2/t$ from eqns. 10 and 11

$$T_{a,max} = 4kD(B - A)^2/\varrho s\delta m^2 \tag{14}$$

It is of special interest in the present context to examine the relationship between $T_{a,max}$ and analytical rate. From eqns. 10, 11 and 4,

$$Uw/dlD = 8(B^2 - A^2) \tag{15}$$

By the elimination (numerically) of $A$ and $B$ between eqns. 15, 14 and 12, one obtains the relationship between $U$ and $T_{a,max}$ in terms of the solution parameters $k$, $D$, $\varrho$, $s$ and $\delta m$, and the separator dimensions $l$, $d$ and $w$, for resolutions determined by $r = 0.90$, 0.95 and 0.99 as shown in Fig. 4.

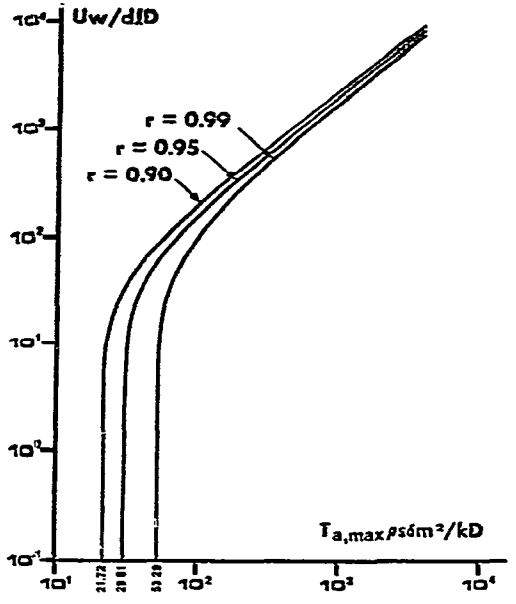


Fig. 4. Relationships between processing rate ($U$), adiabatic temperature rise ($T_{a,max}$) and resolution index ($r$).

*Effects of cooling*

If cooling of the pair of sides of the model separator normal to the electric field were introduced ("isothermal" operation), there would be developed across the separator at any point along its length a temperature profile with highest value half way between the cooled sides. This mid-plane temperature would be lowest at

the input end, rising towards a maximum, steady-state, value with increasing distance up the separator. With the assumption of zero temperature (°C) for the solutions at the input end of the separator, and also for the sidewalls, the mid-plane temperature at the output end would be given by the equation

$$T_{1,\max} = \frac{kw^4}{32K\delta m^2 t^2}\left\{1 - \frac{32}{\pi^3}\sum_{n=0}^{\infty}\frac{(-1)^n}{(2n+1)^3}\exp\left[-\frac{K}{\varrho s}(2n+1)^2\pi^2 t/w^2\right]\right\}$$

where $t$ is the passage-time for solutions through the separator and $K$ is the thermal conductivity[12]. A normalised plot of $T_{1,\max}$ *vs.* $t$ is shown in Fig. 5. Substituting in this equation for $w$ from eqns. 10 and 11, and rearranging, one obtains

$$T_{1,\max}\frac{K\delta m^2}{kD^2} = 8(B-A)^4\left\{1 - \frac{32}{\pi^3}\sum_{n=0}^{\infty}\frac{(-1)^n}{(2n+1)^3}\times\right.$$
$$\left.\times\exp\left[-\frac{K}{\varrho sD}(2n+1)^2\pi^2/16(B-A)^2\right]\right\} \qquad (16)$$

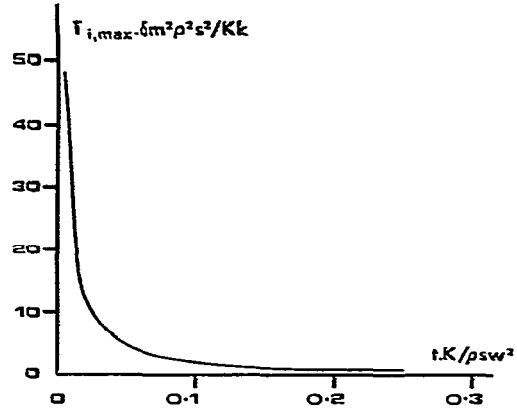


Fig. 5. "Isothermal" temperature rise ($T_{1,\max}$) *vs.* passage time ($t$).

As for the adiabatic case, corresponding values of $T_{1,\max}\ K\delta m^2/kD^2$ and $Uw/dlD$ may be obtained by elimination of $A$ and $B$ between eqns. 16, 15 and 12, but in the present instance, because $T_{1,\max}$ cannot be expressed explicitly in terms of $A$ and $B$, it is necessary to give particular values to the term $K/\varrho sD$ in order to do this. In all systems of practical interest, the values of $K$, $\varrho$ and $s$ would be near those for pure water, *viz.* $K = 6.03\cdot10^{-3}$ J cm$^{-1}$ sec$^{-1}$°C$^{-1}$, $\varrho = 1.0$ g cm$^{-3}$ and $s = 4.186$ J g$^{-1}$°C$^{-1}$ so that $K/\varrho s = ca.\ 1.4\cdot10^{-3}$ cm$^2$ sec$^{-1}$. Therefore, for the sake of illustration, the relationships between analytical rate and temperature have been calculated for three values of $K/\varrho sD$ (dimensionless), *viz.* $10^2$, $10^4$ and $\infty$, corresponding to values of $D$ of *ca.* $1.4\cdot10^{-5}$ cm$^2$ sec$^{-1}$ (as, for example, for sodium chloride), $1.4\cdot10^{-7}$ cm$^2$ sec$^{-1}$ (largest viruses), and zero respectively. These relationships calculated for the three values of $r$ are shown in Fig. 6. It is to be noted that the $K/\varrho sD = 10^4$ plots begin to diverge markedly above the $K/\varrho sD = \infty$ plots only beyond the extreme right-hand side of this figure.

TABLE I

REPRESENTATIVE HYPOTHETICAL SEPARATIONS

Limiting $T_{max}$ values, processing rates and passage times for hypothetical separations made with the Fig. 1 model separator. The following values were assumed for calculation of the processing rates and passage times: $l = 30$ cm; $d = 10$ cm; $w = 0.1$ cm; sample concentration, 1% except for $Cl^-$ (last example) for which 0.05% is assumed; and pure water values for $K$, $\varrho$ and $s$; and a $I_{max}$ of 10°C. In the last example the processing rates are with respect to $Cl^-$, those with respect to glucose being twenty times greater.

| | *k (A/V cm)* | *D (cm²/sec)* | *δm (cm²/sec V)* | *Philpot's separation temperature (°C)* | *r* | *Adiabatic operation* | | | *Isothermal operation* | | |
|---|---|---|---|---|---|---|---|---|---|---|---|
| | | | | | | *Limiting $T_{a,max}$ (°C)* | *Processing rate (g/h)* | *Passage time (sec)* | *Limiting $T_{I,max}$ (°C)* | *Processing rate (g/h)* | *Passage time (sec)* |
| Phycocyan | $7.7 \cdot 10^{-4}$ | $2.2 \cdot 10^{-7}$ | $1.0 \cdot 10^{-4}$ | 0.13 | 0.90 | 0.09 | 131 | 4.6 | $1.5 \cdot 10^{-4}$ | 304 | 2.0 |
| from | | | | | 0.95 | 0.12 | 121 | 4.6 | $2.7 \cdot 10^{-4}$ | 286 | 2.0 |
| phycoerythrin | | | | | 0.99 | 0.22 | 111 | 4.6 | $8.6 \cdot 10^{-4}$ | 274 | 2.0 |
| Yeast flavo- | $1.19 \cdot 10^{-3}$ | $6.28 \cdot 10^{-7}$ | $3.8 \cdot 10^{-5}$ | 3.8 | 0.90 | 2.7 | 0.148 | 49 | $1.3 \cdot 10^{-2}$ | 88 | 6.5 |
| protein from | | | | | 0.95 | 3.7 | 0.113 | 49 | $2.4 \cdot 10^{-2}$ | 81 | 6.5 |
| impurities | | | | | 0.99 | 6.6 | 0.068 | 49 | $7.5 \cdot 10^{-2}$ | 72 | 6.5 |
| Pepsin | $8.0 \cdot 10^{-4}$ | $5 \cdot 10^{-7}$ | *ca.* $2 \cdot 10^{-5}$? | 7.4 | 0.90 | 5.2 | 3.4 | 12 | $2.0 \cdot 10^{-2}$ | 57 | 10.2 |
| from | | | | | 0.95 | 7.1 | 2.0 | 12 | $3.7 \cdot 10^{-2}$ | 52 | 10.2 |
| impurities | | | | | 0.99 | 12.9 | 0.0 | ∞ | $11.6 \cdot 10^{-2}$ | 46 | 10.2 |
| Horse anti- | $9.0 \cdot 10^{-3}$ | $2.2 \cdot 10^{-7}$ | $9.0 \cdot 10^{-6}$ | 181 | 0.90 | 127 | 0.0 | ∞ | 0.21 | 100 | 76 |
| pneumococcus I | | | | | 0.95 | 174 | 0.0 | ∞ | 0.40 | 94 | 76 |
| from serum | | | | | 0.99 | 311 | 0.0 | ∞ | 1.25 | 84 | 76 |
| Albumin | $1.0 \cdot 10^{-3}$ | $5.9 \cdot 10^{-7}$ | $3.1 \cdot 10^{-5}$ | 4.5 | 0.90 | 3.2 | 7.6 | 62 | $1.4 \cdot 10^{-2}$ | 80 | 7.3 |
| from | | | | | 0.95 | 4.4 | 5.7 | 62 | $2.7 \cdot 10^{-2}$ | 74 | 7.3 |
| prealbumin | | | | | 0.99 | 7.8 | 2.9 | 62 | $8.4 \cdot 10^{-2}$ | 66 | 7.3 |
| Glucose | $1.0 \cdot 10^{-3}$ | *ca.* $1.0 \cdot 10^{-5}$ | $6.8 \cdot 10^{-4}$ | 0.16 | 0.90 | 0.11 | 229 | 0.13 | $0.85 \cdot 10^{-2}$ | 232 | 0.13 |
| from | | | | | 0.95 | 0.15 | 213 | 0.13 | $1.59 \cdot 10^{-2}$ | 216 | 0.13 |
| $Cl^-$ | | | | | 0.99 | 0.28 | 197 | 0.13 | $5.02 \cdot 10^{-2}$ | 197 | 0.13 |

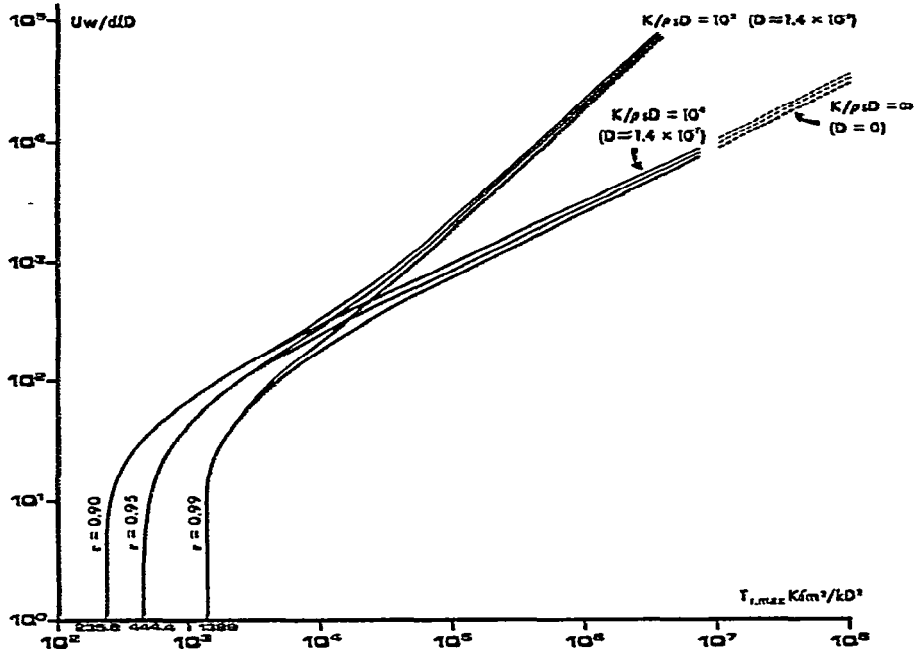


Fig. 6. Relationships between processing rate ($U$), "isothermal" temperature rise ($T_{I,max}$) and resolution index ($r$) for sample components with diffusion constants of *ca.* $1.4 \cdot 10^{-5}$, *ca.* $1.4 \cdot 10^{-7}$ and $\infty$.

## HYPOTHETICAL SEPARATIONS

As shown in Figs. 4 and 6, with both the isothermal and adiabatic modes of operation there are limiting maximum temperatures (defined by solution parameters) below which separation to the given degree of resolution (defined by $r$) is not possible. It is instructive to calculate these for given hypothetical separations, a variety of which are shown in the accompanying table. The examples chosen and the values for $k$, $\delta m$ and $D$ (except for the separations of glucose from chloride and albumin from prealbumin) are those given by Philpot[1]. (The Philpot separation temperatures for the last two examples were calculated using his formula, $\Delta T = 7.38kD/\delta m^2$.)

Table I also shows processing rates and passage times for these hypothetical separations derived on the basis presented above using a separator of length 30 cm, depth 10 cm and width 0.1 cm; pure-water values for $K$, $\varrho$ and $s$ (quoted above) and a $T_{max}$ of 10°C were assumed. The samples were taken to contain 1% of each of the components, except for $Cl^-$ in the last example for which a 0.05% concentration was assumed so that the specific electrical conductance would have a value comparable with those of the other examples —in this example the analytical rates quoted in the table are for the $Cl^-$, those for glucose being twenty times greater.

## DISCUSSION

Figs. 4 and 6 show that for the model separator shown in Fig. 1,

$T_{a,max} \geqslant XkD/\varrho s\delta m^2$°C, and

$T_{i,max} \geqslant YkD^2/K\delta m^2$°C,

where $X$ and $Y$ are functions of $r$. It is to be noted that these limiting separation temperatures are independent of separator parameters, and also that processing rate vanishes at these values, all finite rates involving higher temperatures. Figs. 4 and 6 also show that for given values of $r$, $T_{max}$ (adiabatic or isothermal) and solution parameters, the processing rate, $U$, is proportional to separator depth, $d$, and length, $l$, and inversely proportional to separator width, $w$. And finally these figures show that higher values of $r$ are associated with higher temperatures for a given processing rate, or alternatively lower processing rates for a given temperature.

In other words, the above analysis shows that, with the model separator shown in Fig. 1 operated either adiabatically or with cooling applied to the pair of sides normal to the electric field (the so-called isothermal mode), then: (i) with neither thermal mode of operation could the separation be achieved with less than a certain rise in temperature of the solutions as they traverse the separator; (ii) this limiting separation temperature would be entirely independent of separator dimensions; (iii) the processing rate would be vanishingly small at the limiting separation temperature; (iv) operation at finite rates would necessarily involve temperatures higher than the limiting value, the temperature increasing with processing rate; (v) for a given separation temperature processing rate would be increased indefinitely by increasing the separator depth, $d$, by increasing the length, $l$, or by decreasing the width, $w$; and (vi) improved resolution of the sample components could only be achieved at the expense of higher operating temperatures or lower processing rates or both. It follows that if for a particular separation the limiting adiabatic or isothermal separation temperature were too high (*e.g.* higher than the sample denaturation temperature), then there would be no way in which it could be carried out in apparatus of this sort operated in that particular thermal mode. If, on the other hand, the limiting separation temperature were favourable, changing the dimensions of the separator would allow an increase in throughput which in principle would seem to be without limit. Since enlargement of the separator by increasing length or depth would clearly be limited by physical constraints, and since narrowing (decreasing $w$) would confer additional advantages, this latter is the effect of special interest here.

In arriving at the above conclusions the following simplifying assumptions and approximations were made: (i) solution parameters were taken to be uniform (except for electrophoretic mobility) and not affected by temperature; (ii) in the case of the isothermal separator, the walls between the coolant and the solutions were taken to have zero thermal resistance; (iii) flow in the separator was taken to be uniform in magnitude and direction throughout ("plug flow"); and (iv) the only zone-broadening considered was that due to diffusion. It is instructive to consider how these assumptions might affect the conclusions.

The assumption of uniformity of solution parameters, as well as of their not being affected by temperature, would both seem to be sufficiently reasonable

approximations to reality for the purpose of the present analysis—in practice in electrophoretic analysis, especially of biological polymers such as proteins, the conductivity contributed by the sample itself is relatively small, while the effects of temperature on electrical conductivity and therefore on electric field-strength, electrophoretic mobilities and heating, are modest. Hinckley[13] has shown that, while neglecting the positive temperature coefficient of electrolytic conductivity (*ca.* 2%/°C) can lead to gross (up to *ca.* 50%) underestimation of the temperature in the centre of a column under some conditions, the effect is very small for narrow, flat separators such as those being considered here. The temperature coefficient of viscosity (*ca.* —2.4%/°C at 0°C) would affect the validity of the plug-flow assumption as discussed below, while that of diffusion (*ca.* 2%/°C) would affect the zone spreading calculations. However, on the face of it neither approximation would seem to grossly affect either the values or the characters of the relationships shown in Figs. 4 and 6.

The effect of assuming zero thermal resistance at the walls of the separator would be to underestimate temperature rises occurring during "isothermal" operation: the model considered here would represent the best possible situation, but how nearly it could be approximated to by the use of thin highly conducting materials for the walls of the separator is beyond the scope of the present enquiry.

The assumption of non-turbulent plug-flow, a major departure from the reality of laminar flow increasing in velocity from zero at the walls of the separator to a maximum at the mid plane, was made because without it a convincing analytical description of transport phenomena in the separator seemed unattainable. The consequences of this simplification would be generally to distort patterns of sample component migration as well as of heat production and flow, but the details would depend greatly on the relative magnitudes of $d$ and $w$ (Fig. 1). In the case of $d \gg w$, the model of especial interest here, axial movement of a sample component, instead of being uniform, would fall off as the component migrated under the influences of the electric field towards one or other of the side-walls of the separator, with the consequence that the trajectory, instead of being straight, would be curved outwards towards the side-wall. This effect would certainly increase with narrowing of the model separator (*i.e.* with $w$ decreasing), but it is hard to see how it could affect separability or invalidate the existance of separation temperatures and the qualitative predictions of the effects of narrowing on analytical rate. On the other hand, in the alternative case (Hannig-type separator, $d \ll w$), this effect would be the major cause of zone-broadening under some conditions[14,15,44]: the markedly non-uniform flow profile across the narrow dimension of the separator would combine with the uniform electrophoretic migration at right angles to it to cause an initially straight sample component zone to become progressively more and more curved between the front and back faces of the apparatus during passage through it, giving rise to the special sort of dispersion described by Taylor for an initially discrete zone of material flowing down a tube[16]. Taylor-type dispersion would be counteracted by simple diffusion operating across the curved zone of the sample component, this corrective effect being greater the thinner the conduit and the longer the passage time. In narrow, rectangular electrophoretic separators of the present sort ($d \gg w$), Taylor-type dispersion would operate only at the very edges of the conduit so that its effects would be small, while in annular separators with a radial field such as the Philpot-

Harwell separator[36], conforming essentially to the same model, it would be completely absent.

Clearly, temperature distribution within both adiabatic and cooled separators would also be implicated in the plug-flow simplification in that: (i) laminar flow would involve the outside layers of electrolyte spending longer in the electric field than the inner ones and therefore generating more heat; (ii) it would also involve physical translation of the layers of heated electrolyte relative to each other in the direction of flow; and (iii) the temperature distribution would affect the flow pattern itself via its effect on viscosity. However, considering the decreasing heat production and increasing cooling efficiency with narrowing of separators of the $d \gg w$ sort, we see no reason why the properties predicted for the plug-flow models should not remain at least qualitatively true in practice, especially the existence of limiting separation temperatures and the increasing processing capacity with narrowing for given operating temperatures.

Of the variety of factors that could conceivably disturb the flow pattern or otherwise affect zone sharpness in thin-layer separators of the $d \gg w$ type, diffusion has been highlighted here because it was felt to be the most fundamental in that it is unavoidable in principle, imposing absolute restrictions on separator performance. Other factors that could affect zone sharpness in such separators under some conditions include; (i) convection due to temperature and concentration gradients; (ii) electro-osmosis; (iii) simple turbulence; (iv) electro-turbulence; (v) Kohlrausch-type phenomena, and (vi) chemical interactions between sample components.

Convection would be reduced by separator narrowing (*i.e.* decreasing $w$) since this would result in smaller temperature differentials and reduced passage-times. Furthermore, convection can be counteracted by the addition of thickening agents[4,17]. Electro-osmotic circulation within a separator can be eliminated by special treatments of the separator walls[18,19], but in any case, it would occur in the thin-layer separator only at the side-walls —*i.e.* the pair of walls parallel to the electric field— and would therefore be small because of their relatively small area. On the other hand, electro-osmotic flow through the pair of walls conducting the electric field into and out of the separator could be quite a different matter —clearly, because of their influence on both thermal and material exchanges, the nature of these latter walls would be a major technical concern in separator construction. Simple turbulence would not be a problem special to narrow separators because the Reynolds number, which describes this tendency, is proportional to mean flow velocity $\times$ $w$, which, other things being equal, would not be affected by narrowing.

The effects on zone sharpness of Kohlrausch-type phenomena and sample component interactions would depend largely on the particular separation being carried out. The former depends on the progressive redistribution of material within zones during electrophoresis as formulated by Kohlrausch in 1897[20]; the effects increase with sample concentration, and they can lead to sharpening of zones as well as to broadening depending on the composition of both the sample and the background electrolyte. Mikkers *et al.*[21] have described this effect as it applies to support-free electrophoresis, and also shown practically (on a very small scale) how it may be applied to improve resolution[22]. Interaction between different sample components (*e.g.* reversible association), as well as the existence of a single component in two or more states with different electrophoretic mobilities, could clearly affect zone

sharpness. These situations have been dealt with extensively by Cann and co-workers[23–26] and by Boyack and Giddings[27], but are beyond the scope of the present investigation.

Electro-turbulence is a phenomenon that has apparently received little attention, especially in connection with electrophoresis. Early on in his development of the thin-layer separator, Philpot found that, at least at higher intensities (100–200 V/cm), the electric field caused a peculiar mixing of the solutions, distinct from ordinary convection, which he referred to as dielectric instability[28]. Similar phenomena have been reported for a range of different liquids placed in a d.c. electric field[29–31,47]. It has been reported that the activity of the turbulence increases with dielectric constant of the liquid, that it is absent in a.c. fields, and that it appears only when the field-strength is increased beyond a threshold value. It would seem to be caused by a force gradient, caused somehow by the electric field acting on the liquid in much the same way as gravity acts on a horizontal liquid film heated from below in the system studied by Rayleigh[32] —tendency to convection is damped out at low intensities of the force-field, but active, localised convection cells appear at field strengths above a certain value which depends on the nature of the liquid[48]. Clearly, an understanding of this phenomenon will be fundamental to future developments in support-free electrophoretic separators, but the observation that it occurs only at higher field-strengths suggests that it might be avoidable.

The influence of viscosity on separator operation was considered to be too complex for it to be included in the above analysis, but clearly viscosity would be involved in the rate of diffusion of the sample components and in their electrophoretic mobilities, as well as in convection and flow of the liquid within the separator. Since diffusion and electrophoretic migration are each affected by viscosity in the same way, it would not seem to be possible to reduce the diffusional component of zone overlapping by manipulation of viscosity. On the other hand, as discussed by Dobry and Finn[4] and Finn[17], it is possible by the judicious use of certain viscous additives to stabilize laminar flow while not appreciably affecting motion at a molecular level —electrically neutral, long-chain polymeric additives such as methyl cellulose, dextran and polyvinyl alcohol reduce convective and turbulent tendencies without significantly affecting either diffusional or electrophoretic migration rates. Furthermore, while Finn considered only relatively high levels of additive (final viscosity 10 cP or greater), it has also been found that minute levels of such long-chain additives[33,34] can bring about spectacular reductions in turbulent friction and therefore presumably in tendency to turbulence. Even suspensions of microscopic fibres such as asbestos have this effect[35]. Obviously viscosity is an important factor in the operation of support-free electrophoretic separators —the possibility of stabilizing laminar flow with microscopic fibre additives, which would be easily removed from the product by filtration, is at first sight a particularly attractive idea.

In addition to the increased analytical capacity that a narrow ($w$ small) separator would have because of low rate of heat production, certain other advantages would accrue. For one thing, the need for $d$ (Fig. 1) to be small for cooling (as exists in most continuous electrophoretic separators, which are of the Hannig-type[7]) would be obviated so that analytical capacity could be increased still further by increasing $d$ (Figs. 4 and 6): since in the Hannig-type of apparatus the value of $d$ is typically of the order of 0.5 mm, an increased capacity of several hundred times

could be attained in a separator of very modest dimensions. Furthermore, a small $w/d$ ratio would virtually eliminate Taylor-type dispersion, as discussed above. Additionally, the short passage times of narrow separators would be conducive to preservation of heat-labile sample materials and, as discussed above, to avoidance of convection and electro-osmosis.

In order to bring out the principles of separator operation, the argument developed above was based on the separation of only two sample components, while in practice, of course, one would expect to be able to collect many more fractions. To cope theoretically with multiple fractions, the model separator would need to be correspondingly increased in width ($w$, Fig. 1), which would give rise to corresponding increases in the separation temperatures, but obviously the same principles would apply, in particular the existence of limiting separation temperatures, and the form of the relationships between analytical rate, resolution, separator dimensions and $T_{max}$.

Collecting multiple fractions from a very narrow separator would also introduce some technical problems, but this has been overcome neatly in the more recent Philpot separator[3,28,36] (outlined below), by withdrawing the fractions from relatively large slots or circular holes at the side of the separation chamber near the outlet end, instead of across the end itself as done by Dobry and Finn[5].

The present analysis confirms Philpot's values[1] for the limiting separation temperatures in certain hypothetical separations carried out adiabatically (see table). (Philpot used 95.4% separation —*i.e.* $\pm$ 2 standard deviations of the normal distribution equation describing diffusion from an infinitesimally narrow starting zone— to our 95.0%, which probably explains the small discrepancies.) The table also shows, as one would expect, that cooling increases the scope of the method in that: (i) in every case the limiting values of $T_{I,max}$ are considerably lower than those of $T_{a,max}$ and (ii) the "isothermal" processing rates (for a separator of length 30 cm, depth 10 cm and width 0.1 cm, with pure-water values for $K$, $\varrho$ and $s$, and a $T_{max}$ of 10°C) are higher than the corresponding adiabatic rates (with a single exception). The improvement in processing capacity with the introduction of cooling for a given degree of resolution of the sample components is considerable for the separations of larger molecules, but insignificant for the separation of $Cl^-$ from glucose, a finding confirmed by Philpot's own calculations[37]. The table also shows the relatively short passage times ranging from a fraction of a second for the glucose-from-$Cl^-$ separation to *ca.* 1 min for the most difficult ones. These are in contrast to the passage times in Hannig-type apparatus, which are of the order of minutes or hours. Finally, it is clear from the examples given that only the most difficult of separations by the thin-layer method would be precluded by temperature rise, even without cooling of the apparatus.

Philpot's published analysis[1,28] depended on the diffusional relationship

$$z = C\sqrt{t}$$

where $z$ is the width of a zone of diffusing material containing a given proportion of the original, $t$ is the duration of the diffusion, and C is a constant depending on both the diffusion constant and the proportion of material to be found within $z$. This relationship is a valid approximation to reality in situations in which the original zone width is sufficiently small relative to the duration of diffusion. Thus Philpot's

analysis gave the correct limiting adiabatic separation temperatures for the several hypothetical systems considered (see table) since these correspond to operation of the separator at zero analytical rate as would occur if the sample input zone were infinitely thin. However, we found this simplified approach to the influence of diffusion to be inappropriate when applied to the calculation of processing rate, which necessarily involves finite width sample zones, and therefore used the exact equation as a basis for the analysis. Philpot did consider processing rate, but his earlier treatment of it[1] was brief and rather obscure while in his only other theoretical publication[28] he merely stated without derivation that

$$F = 4.186STm^2/\eta k$$

where $F$ is the flow-rate of carrier electrolyte (ml/min) to accommodate migration of fastest component; $S$ is the scale factor which stands for migration distance in cm/area in $cm^2$ normal to migration; $T$ is the adiabatic temperature rise; $m$ is the mobility of fastest component at 0°C; $\eta$ is the average relative viscosity of carrier electrolyte over the actual temperature range; and $k$ is the conductivity of carrier electrolyte at 0°C. Allowing for what seems to be a misprint in this paper (inversion of the scale factor, $S$), this equation predicts proportionality between processing rate and $ldT_{a,max}/w$ (our notation) much the same as do the combined eqns. 14 and 15 of the present communication —eqn. 15 shows directly that processing rate is proportional to $l$ and $d$ and inversely proportional to $w$, while Fig. 4, derived from these two equations, shows that processing rate and $T_{a,max}$ increase together, though not proportionately. From its simplicity, it would seem that Philpot derived this equation using the same approximation as he used for his earlier analysis.

However, in spite of the lack of analytical documentation in Philpot's published work, it is clear from exchanges of letters with him that he fully appreciates the nature of the relationships between resolving power, processing rate and temperature in the Fig. 1 model, and furthermore that his unpublished calculations fully support the potential of the thin-layer principle as a basis for scaling-up.

In spite of this promise, the thin-layer approach seems to have attracted little attention by others, either theoretical or practical.

On the theoretical side, a few studies have been published on limited aspects of this approach. Reis *et al.*[14] analysed the operation of continuous electrophoretic separators at vanishingly small current densities and sample concentrations. They concluded that, while Philpot's concept of the limiting effects of diffusion ("separation temperature") was correct for model separators with plug-flow, with the admission of non-uniform flow, Taylor-type dispersion would be a far greater cause of zone-broadening, except in cases in which the depth of the separator ($d$ in Fig. 1) was extremely small. However, these workers considered only the Hannig-type configuration of separator ($d \ll w$) while Philpot was preoccupied by the alternative configuration ($d \gg w$), because of its much greater potential for scaling-up, in which, as discussed above, Taylor-type dispersion would seem to be far less important. A number of other groups also have considered theoretically this and other aspects of operation of Hannig-type separators[10,15,38,44–46].

In a recent paper, Strickler[39], largely concerned with the possibility of testing such apparatus in a weightless environment to avoid the effects of unwanted convection, presented an analysis of the functioning of continuous separators, examin-

ing the effects of non-uniform flow profiles on sample component trajectory, electro-osmosis (considered negligible in the thin-layer separator) and turbulence, as well as the problem of electrode design and of fraction collection. He, and also Hinckley in his paper on temperature patterns[13], have pointed out the advantages of the cooled, thin-layer ($d \gg w$) configuration over the alternative Hannig-type apparatus, for large-scale working, but these workers based their preference simply on the absence of restrictions on depth implicit in this configuration and were apparently unaware of the existence of limiting separation temperatures and of the additional scale-up that would be made possible by reducing width.

On the constructional side, Philpot himself described a very simple rectangular separator in his 1940 paper[1] ("classed with those aeroplanes at South Kensington which never left the ground"). (This apparatus may have the distinction of being the first electrophoretic separator ever built in "Perspex", so widely used for this purpose today.) He subsequently developed a much refined annular version of this apparatus, which was described in a British patent in 1969[2]. In a second patent in 1970[3], Philpot introduced "angular velocity gradient stabilization" (rotation of the outer cylinder of the separator relative to the inner cylinder) to stabilize the fluid sandwich within the separator against mixing tendencies, especially that of electro-turbulence[28,36]. This latter development was pursued under the auspicies of the National Research Development Corporation, more recently in collaboration with the U.K. Atomic Energy Authority at Harwell, to the stage where a commercial separator was offered[36]. The specifications of this commercial separator include adiabatic operation; carrier electrolyte input rate 0.5–1.5 l/min; sample input rate 15–25 ml/min; sample concentration, up to 6% protein; outlets, 30; resolution (peak widths of single components), 3 outlets; good resolution at processing rates up to 0.2 g/min for bovine serum albumin; dilution 2–10× depending on mobilities; passage time, 30–60 sec; temperature rise, up to 20°C depending on mobilities; outer cylinder rotation at 100–200 rpm; radial thickness of the separation chamber, 5 mm. Satisfactory fractionations of blood proteins, muscle extracts, microbiological culture filtrates and other organic compounds including dyes and antibiotics, as well as of particulate preparations, are claimed. Both larger and smaller versions of this basic separator have been successfully built[40].

Both continuous[41] and batch-wise[42] separators based on the electroconvection (electrodecantation) principle are essentially very like the thin-layer method under study here in spite of their being restricted to producing only two fractions. Of special significance in the present context is the high-capacity capability of these separators.

Tippetts *et al.*[6] experimented extensively with a separator very similar to Philpot's original one[1] in that it was horizontal with flow-stability maintained by a vertical gradient in density within the separator; a special fraction collection system was required. Both adiabatic and cooled versions were tried. However, the thickness of the Mel separator (corresponding to $w$ in Fig. 1) was quite large (of the order of 1 cm), and its operation so dominated by gravitational considerations that its relevance to the present discussion is small. High analytical rates were never claimed.

Dobry and Finn[4,5] and Finn[17] have described the fractionation of dye mixtures in a vertical apparatus designed to explore the use of the thin-layer principle for large-scale operation. Although they considered such factors as non-uni-

form flow, electro-osmosis, resolving power, heating and convection, and obviously believed in the thin-layer principle for scaling-up, their approach was a largely practical one and their brief theoretical analysis did not demonstrate the essential relationships between separator dimensions, processing rate, resolution, and temperature.

To sum up, the rather limited analysis of the operation of the continuous electrophoretic separator presented here confirms the contention of Philpot and others concerning the promise of the thin-layer principle for scaling-up. This contention is endorsed on a practical level by the high performance of electroconvectors, and especially by that of the Philpot–Harwell separator itself[36]. The great value that such support-free, high capacity separators would have for both industry and research, especially for the purification of delicate biological materials such as enzymes, polypeptide hormones and antibodies, goes without saying.

However the fundamental relationships between processing rate, resolving power and temperature in terms of solution and separator parameters do not seem to be at all widely appreciated. Although in the present analysis we have found it necessary to make many simplifying assumptions, the most significant probably being the assumption of plug instead of laminar flow, nevertheless we feel that the relationships derived for the model have important implications for real separators, in particular in indicating the existence of limiting separation temperatures imposed by diffusion, and the tendency for electrical heating to be reduced indefinitely on narrowing. This being so, if the purely technical problems of: (i) collecting multiple fractions from very narrow separators; (ii) maintaining well-behaved laminar flow; and (iii) providing satisfactory materials for the pair of separator walls through which the electric field enters and leaves, could be solved, then, with the proviso of favourable limiting separation temperatures, there would seem to be no limit in principle to the extent of scale-up possible with such an apparatus, simply by narrowing.

With regard to the future, there would seem to be three especially important areas of thin-layer electrophoresis development into which effort could usefully be directed. Firstly, exploration of operation, both adiabatic and cooled, at thicknesses less than the 5 mm of the Philpot-Harwell apparatus. Secondly, a thorough study of the factors affecting flow-stability, so as to put on a firm basis the requirements for stabilization. Philpot in a recent letter remarked that he was impressed by how much the flow stability in his latest separator was improved by the use of a rapidly circulated, cooled, electrode solution of the same concentration as in the flow channel instead of the relatively concentrated solution used previously; so much so that he was led to suggest that special means of stabilize flow might be done away with altogether. If this proved to be so, the annular configuration could be replaced by the original rectangular configuration, which would be cheaper and easier to produce and which would be more flexible in that the thickness ($w$ in Fig. 1), the most critical of the dimensions, could be made easily adjustable. Furthermore it would facilitate the putting together of large, multicellular, units for really large-scale or complex analytical programmes. And finally, the development of a relatively small version of the Philpot-Harwell, or similar rational, flexible and efficient support-free preparative separator, would be most welcome in biochemical laboratories throughout the world.

ACKNOWLEDGMENTS

We gratefully acknowledge financial assistance for this study from the Canterbury Medical Research Foundation (Christchurch, New Zealand), and the N.Z. Medical Research Council.

REFERENCES

1 J. St. L. Philpot, *Trans. Faraday Soc.*, 36 (1940) 38.
2 J. St. L. Philpot, *British Pat.* 1,150,722 (Cl. B Olk), April 30, 1969, Appl. February 5, 1965, 9 pp.
3 J. St. L. Philpot, *British Pat.* 1,186,184 (Cl. B Olk), April 2, 1970, Appl. March 23, 1966, 13 pp.
4 R. Dobry and R. K. Finn, *Chem. Eng. Progr.*, 54 (1958) 59.
5 R. Dobry and R. K. Finn, *Science*, 127 (1958) 697.
6 R. D. Tippetts, H. C. Mel and A. V. Nichols, in D. Hershey (Editor), *Proc. 33rd Ann. Chem. Eng. Symp. Chemical Engineering in Medicine and Biology, Cincinatti, Ohio, October 20–21st, 1966*, Plenum, New York, 1967, p. 505.
7 K. Hannig, *J. Chromatogr.*, 159 (1978) 183.
8 J. Barrollier, E. Watzke and H. Gibian, *Z. Naturforsch, B*, 13 (1958) 754.
9 A. Strickler, *U.S. Pat.* 3,412,007 (Cl. 204–299), November 19, 1968, Appl. August 23, 1965, 5 pp.
10 V. R. Huebner and R. H. Lawson, *Separ. Sci.*, 3 (1968) 265.
11 V. P. Shvedov and A. V. Stepanov, *Russ. J. Phys. Chem.*, 35 (1961) 102.
12 H. S. Carslaw and J. C. Jaeger, *Conduction of Heat in Solids*, Oxford at the Clarendon Press, London, 2nd ed., 1959, p. 130.
13 J. O. N. Hinckley, *J. Chromatogr.*, 109 (1975) 209.
14 J. F. G. Reis, E. N. Lightfoot and H.-L. Lee, *AIChE J.*, 20 (1974) 362.
15 A. Strickler, *Separ. Sci.*, 2 (1967) 335.
16 G. I. Taylor, *Proc. Roy. Soc. (London)*, A219 (1953) 186.
17 R. K. Finn, in H. M. Schoen (Editor), *New Chemical Engineering Separation Techniques: Electrophoresis*, Wiley-Interscience, New York, 1962, p. 387.
18 S. Hjertén, *Chromatogr. Rev.*, 9 (1967) 122.
19 A. C. Krupnick, *AIAA Pap.*, 74–157 (1974) 5 pp.
20 F. Kohlrausch, *Ann. Physik Chem.*, 62 (1897) 209.
21 F. E. P. Mikkers, F. M. Everaerts and Th. P. E. M. Verheggen, *J. Chromatogr.*, 169 (1979) 1.
22 F. E. P. Mikkers, F. M. Everaerts and Th. P. E. M. Verheggen, *J. Chromatogr.*, 169 (1979) 11.
23 J. R. Cann and H. R. Bailey, *Arch. Biochem. Biophys.*, 93 (1961) 576.
24 J. R. Cann, *J. Amer. Chem. Soc.*, 83 (1961) 4784.
25 J. R. Cann and W. B. Goad, *Arch. Biochem. Biophys.*, 108 (1964) 171.
26 J. R. Cann and W. B. Goad, *J. Biol. Chem.*, 240 (1965) 1162.
27 J. R. Boyack and J. C. Giddings, *J. Biol. Chem.*, 235 (1960) 1970.
28 J. St. L. Philpot, in E. Reid (Editor), *Methodological Developments in Biochemistry, Vol. 2: Preparative Techniques*, Longman, London, 1973, p. 81.
29 W. P. Cropper and H. S. Seelig, *Ind. Eng. Chem. Fundam.*, 1 (1962) 48.
30 D. R. Brown, *Nature (London)*, 202 (1964) 868.
31 M. P. Sheppard, *Project Report for B.E. (Chem)*, University of Canterbury, Christchurch, New Zealand, 1975.
32 Lord Rayleigh, *The London, Edinburgh & Dublin Philosophical Magazine & Journal of Science*, 32 (1916) 529.
33 J. W. Hoyt, *Proc. 2nd Int. Conf. on Drag Reduction, Cambridge, U.K. August 31–September 2, 1977*, BHRA Fluid Engineering, Bedford, 1978.
34 P. S. Virk, *AIChE J*, 21 (1975) 625.
35 W. D. McComb and K. T. J. Chan, *Nature (London)*, 280 (1979) 45.
36 A. R. Thomson, P. Mattock and G. F. Aitchison, in H. E. Sanberg (Editor), *Proc. Int. Workshop on Technology for Protein Separation and Improvement of Blood Fractionation, Reston, Virginia, U.S.A., September 7–9, 1977*, U.S. Dept. of Health, Public Health Service, Bethesda, Maryland, 1978, p. 441.

37 J. St. L. Philpot, personal communication.
38 S. Ostrach, *J. Chromatogr.*, 140 (1977) 187.
39 A. Strickler, *AIAA J.*, 16 (1978) 463.
40 A. R. Thomson, personal communication.
41 M. Bier, in M. Bier (Editor), *Electrophoresis: Theory, Methods and Applications*, Academic Press, New York, 1959, p. 295.
42 A. Polson and J. F. Largier, in P. Alexander and R. J. Block (Editors), *A Laboratory Manual of Analytical Methods of Protein Chemistry (including Polypeptides), Vol. I*, Pergamon Press, London, 1960, Ch. 6, p. 161.
43 K. Hannig, H. Wirth, B.-H. Meyer and K. Zeiller, *Hoppe-Seyler's Z. Physiol. Chem.*, 356 (1975) 1209.
44 J. A. Giannovario, R. N. Griffin and E. L. Gray, *J. Chromatogr.*, 153 (1978) 329.
45 L. R. McCreight, R. N. Griffin, R. J. Locker and J. O. Giannovario, *AIAA J*, 16 (1978) 471.
46 F. J. Micale and J. W. Vanderhoff, *Separ. Purif. Methods*, 5 (1976) 361.
47 J. M. Schneider and P. K. Watson, *Phys. Fluids*, 13 (1970) 1948.
48 P. Atten and R. Moreau, *C.R. Acad. Sci., Paris*, 270 (1970) 415.